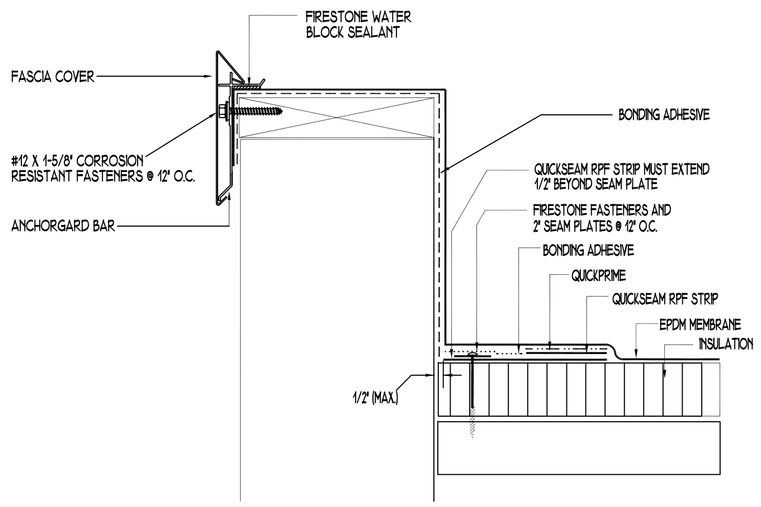

Firestone BUILDING PRODUCTS | ANCHORGARD @ PARAPET | 1

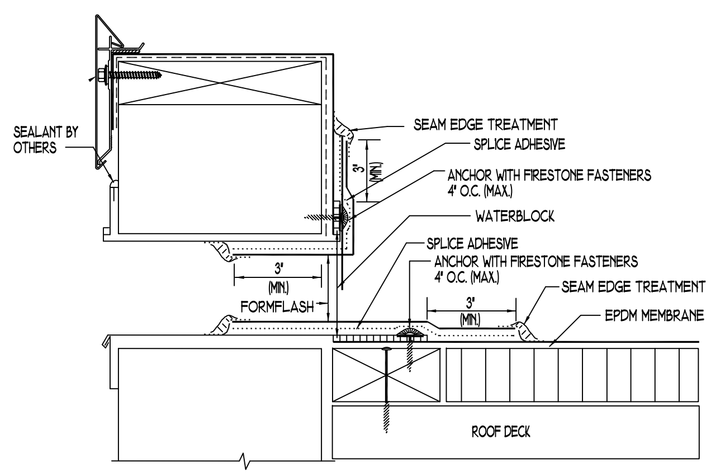

Firestone BUILDING PRODUCTS | SCUPPER | 2

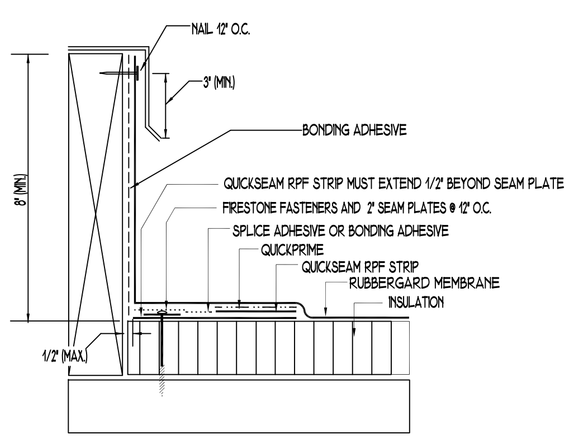

Firestone BUILDING PRODUCTS | CURB FLASHING | 3

NOTES:
1. REMOVE ALL EXISTING FLASHINGS, LEAD, ETC. PIPE SURFACE MUST BE FREE OF ALL RUST, GREASE, ETC.
2. PIPE MUST BE ANCHORED TO BOTTOM SIDE OF DECK TO ASSURE STABILITY.
3. DO NOT INSTALL CLAMPING RING AROUND TOP OF FORMFLASH.

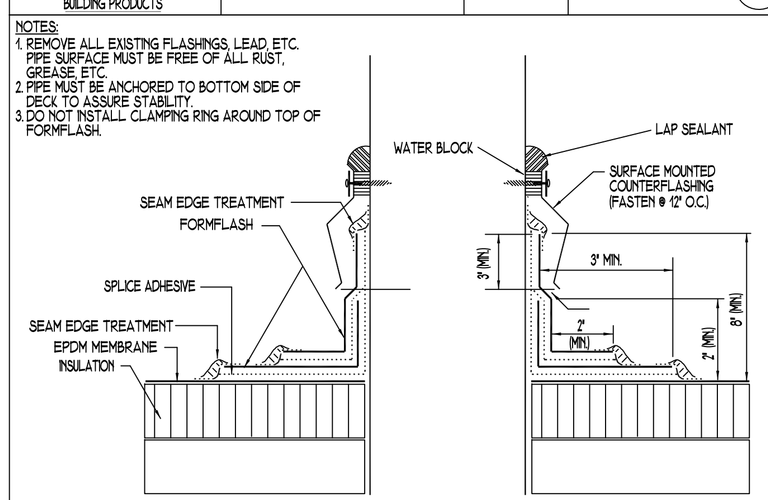

Firestone BUILDING PRODUCTS | FIELD WRAP PIPE FLASHING | 4

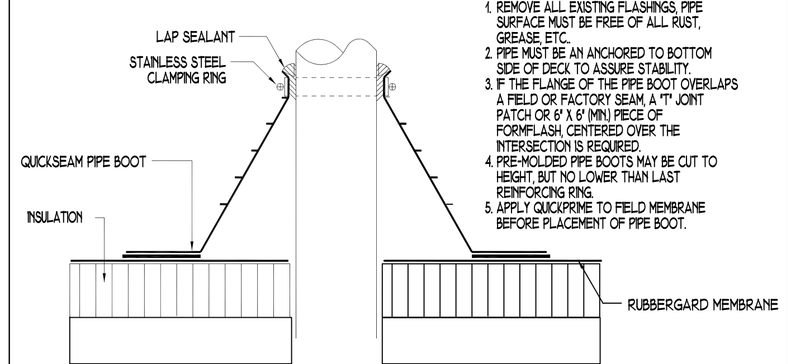

NOTES:
1. REMOVE ALL EXISTING FLASHINGS, PIPE SURFACE MUST BE FREE OF ALL RUST, GREASE, ETC.
2. PIPE MUST BE AN ANCHORED TO BOTTOM SIDE OF DECK TO ASSURE STABILITY.
3. IF THE FLANGE OF THE PIPE BOOT OVERLAPS A FIELD OR FACTORY SEAM, A "T" JOINT PATCH OR 6" X 6" (MIN) PIECE OF FORMFLASH, CENTERED OVER THE INTERSECTION IS REQUIRED.
4. PRE-MOLDED PIPE BOOTS MAY BE CUT TO HEIGHT, BUT NO LOWER THAN LAST REINFORCING RING.
5. APPLY QUICKPRIME TO FIELD MEMBRANE BEFORE PLACEMENT OF PIPE BOOT.

Firestone BUILDING PRODUCTS | PRE-MOLDED PIPE FLASHING | 5

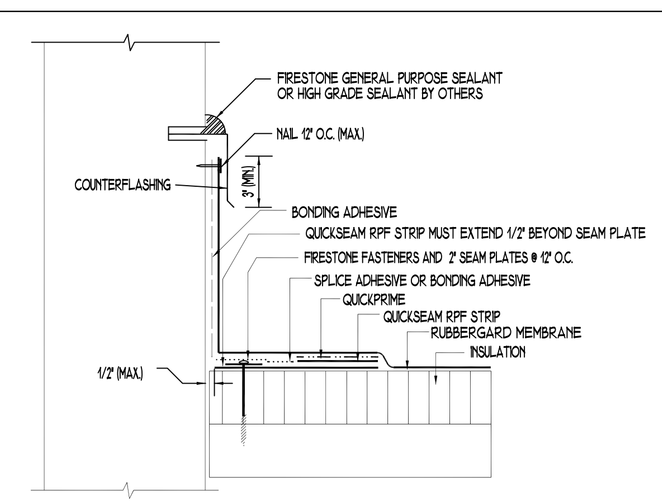

Firestone BUILDING PRODUCTS | TERMINATION AND BASE TIE-IN | 6

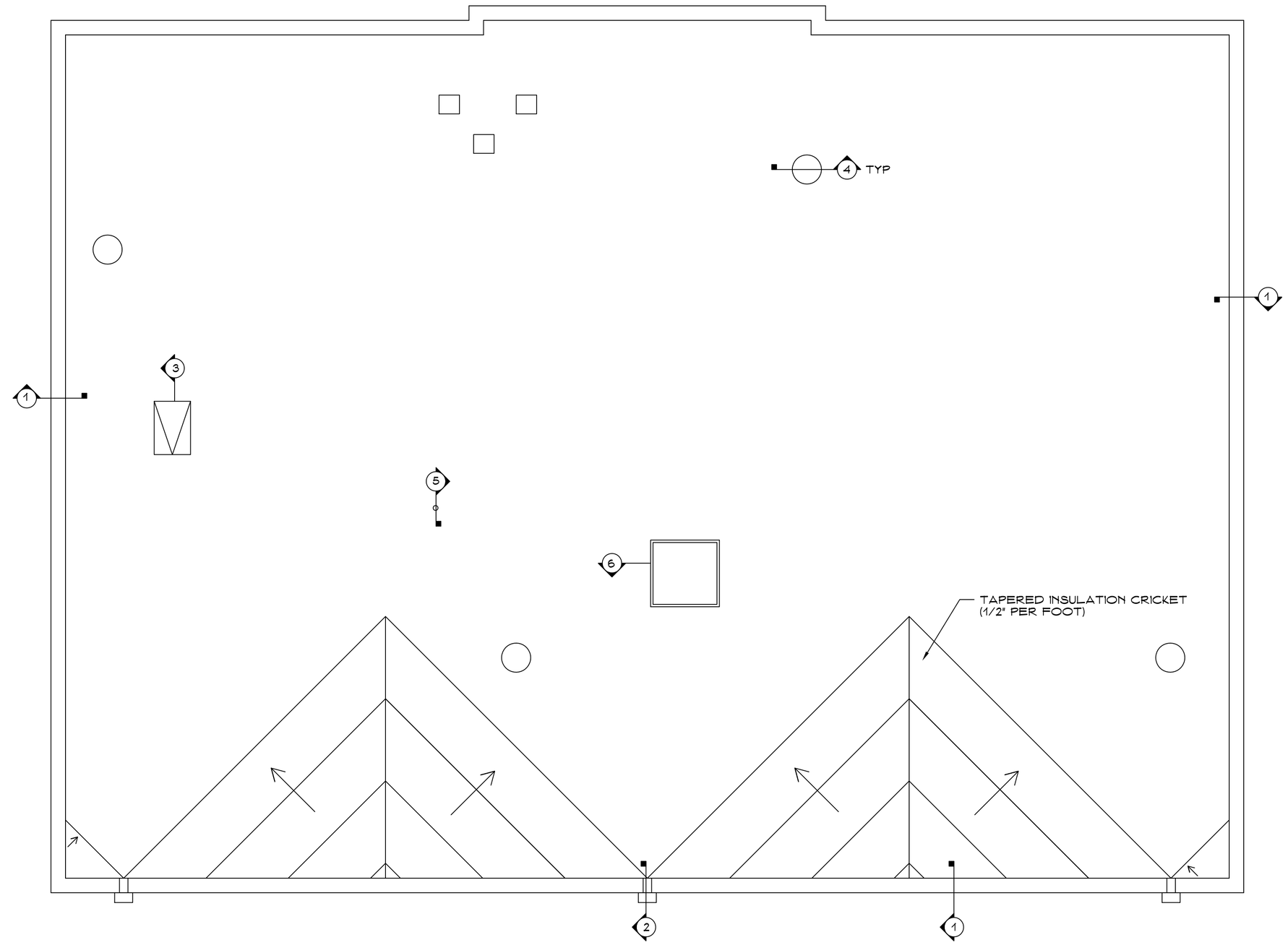

ROOF PLAN
SCALE: 3/16" = 1'-8"

SYSTEM ASSEMBLY

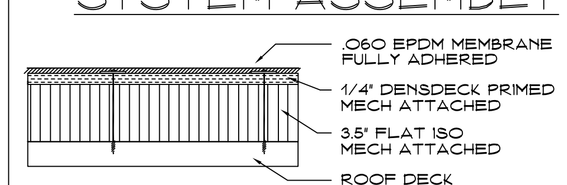

CT ROOFING REPS
191 COMMERCE STREET
EAST BERLIN, CT 06023
PHONE: (860) 829-2912
FAX: (860) 829-2914

SCALE: NOTED
DATE: 5/29/14
PAGE: 1 OF 1
DRAWN BY: SG

PROJECT: FOXON RECREATION CENTER
NORTH HIGH STREET
EAST HAVEN, CT

Firestone BUILDING PRODUCTS

RP-1